FLENDER N-Eupex (Germany) – typ **B**

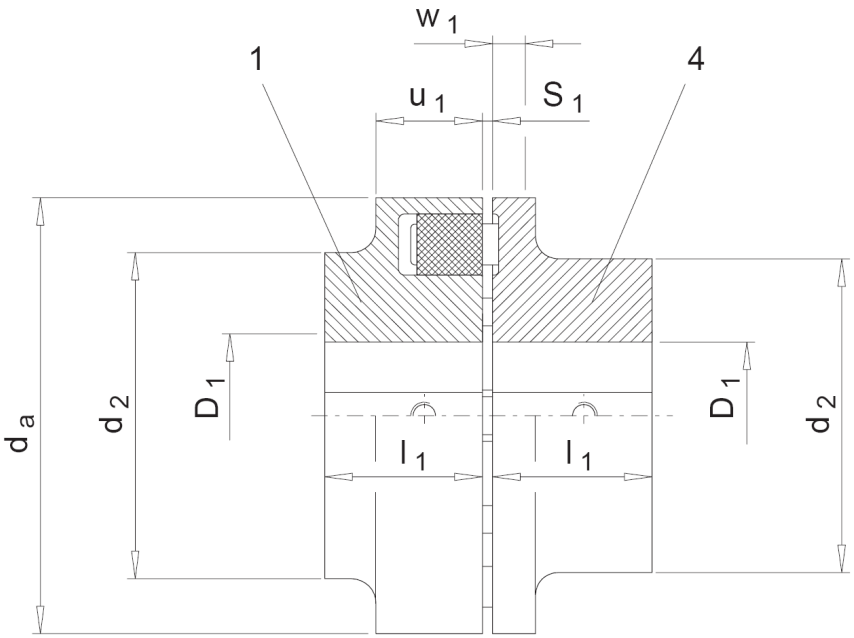

RATHI N-Flex – typ **RN**

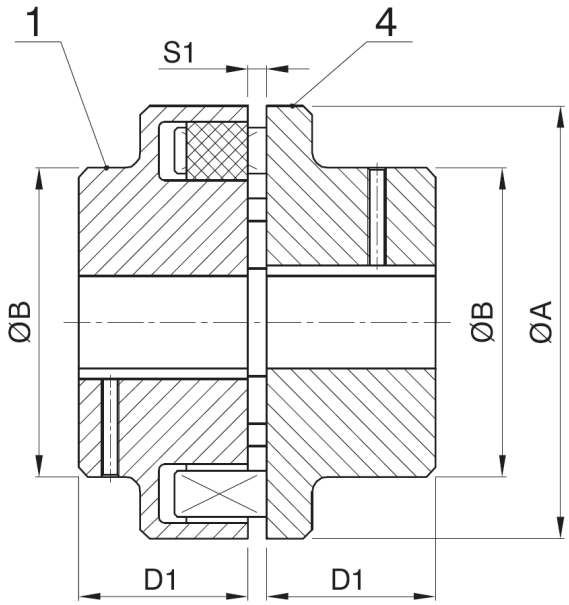

Typ spojky	M_{KN} [N.m]	n_{MAX} [min^{-1}]	max.vrtání [mm] poz.1	max.vrtání [mm] poz.4	d_a [mm]	d_2 [mm]	l_1 [mm]	Typ spojky	M_{KN} [N.m]	n_{MAX} [min^{-1}]	max.vrtání [mm] poz.1	max.vrtání [mm] poz.4	øA [mm]	øB [mm]	D1 [mm]
B 58	19	5000	19	24	58	40	20								
B 68	34	5000	24	28	68	50	20	RN 68	34	5000	24	28	68	46	20
B 80	60	5000	30	38	80	68	30	RN 80	60	5000	30	38	80	68	30
B 95	100	5000	42	42	95	76	35	RN 95	100	5000	42	42	95	76	35
B 110	160	5000	48	48	110	86	40	RN 110	160	5000	48	48	110	86	40
B 125	240	5000	55	55	125	100	50	RN 125	240	5000	55	55	125	100	50
B 140	360	4900	60	60	140	100	55	RN 140	360	4900	60	60	140	100	55
B 160	560	4250	65	65	160	108	60	RN 160	560	4250	65	65	160	108	60
B 180	880	3800	75	75	180	125	70	RN 180	880	3800	75	75	180	125	70
B 200	1340	3400	85	85	200	140	80	RN 200	1337	3400	85	85	200	140	80
B 225	2000	3000	90	90	225	150	90	RN 225	2006	3000	90	90	225	150	90
B 250	2800	2750	100	100	250	165	100	RN 250	2770	2750	100	100	250	165	100
B 280	3900	2450	110	110	280	180	110								

FLENDER N-Eupex (Germany) – typ **H**

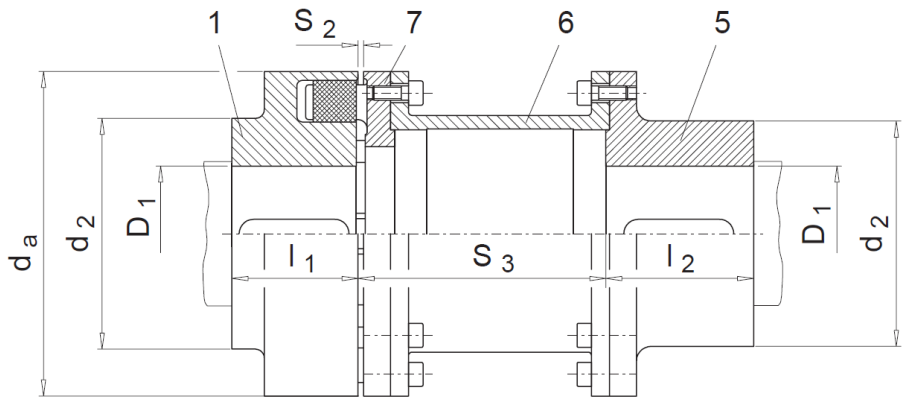

RATHI N-Flex – typ **RNS**

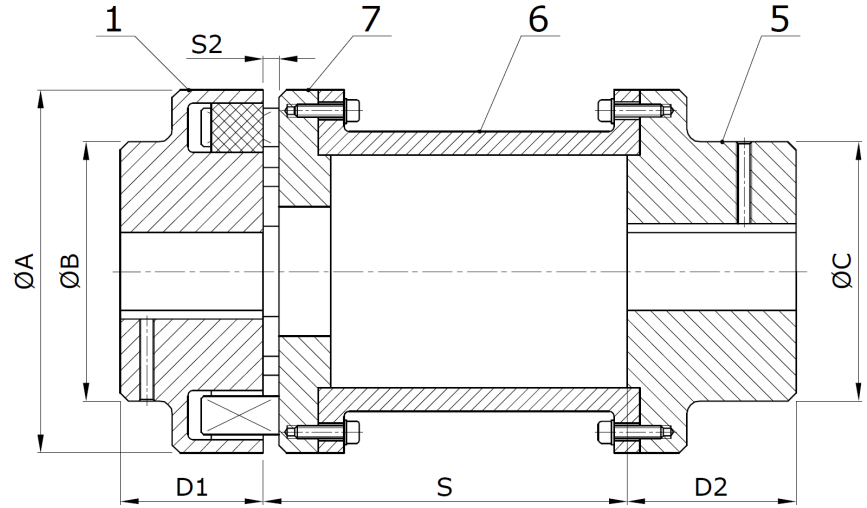

Typ spojky	M_{KN} [N.m]	n_{MAX} [min^{-1}]	max.vrtání [mm] poz.1	max.vrtání [mm] poz.5	d_a [mm]	d_2 poz.1 [mm]	d_2 poz.5 [mm]	l_1 [mm]	l_2 [mm]	S_3 [mm]
H 80	60	5000	30	32	80		55	30	45	100/140
H 95	100	5000	42	42	95	76	70	35	45	100/140
H 110	160	5000	48	48	110	86	80	40	50/60	100/140/180
H 125	240	5000	55	55	125	100	90	50	50/60	100/140/180
H 140	360	4900	60	60	140	100	100	55	65	100/140/180
H 160	560	4250	65	65	160	108	108	60	70	100/140/180
H 180	880	3800	75	75	180	125	125	70	80	140/180
H 200	1340	3400	85	85	200	140	140	80	90	180/200/250
H 225	2000	3000	90	90	225	150	150	90	100	180/200/250
H 250	2800	2750	100	100	250	165	165	100	110	200/250
H 280	3900	2450								
H 315	5500	2150								
H 350	7700	1950								
H 400	10300	1700								
H 440	13500	1550								

Typ spojky	M_{KN} [N.m]	n_{MAX} [min^{-1}]	max.vrtání [mm] poz.1	max.vrtání [mm] poz.5	øA [mm]	øB [mm]	C [mm]	D1 [mm]	D2 [mm]	S [mm]
RNS 80	60	5000	30	32	80	68	55	30	45	100/140
RNS 95	100	5000	42	42	95	76	70	35	45	100/140
RNS 110	160	5000	48	48	110	86	80	40	50	100/140/180
RNS 125	240	5000	55	55	125	100	90	50	50	100/140/180
RNS 140	360	4900	60	60	140	100	100	55	65	100/140/180
RNS 160	560	4250	65	65	160	108	108	60	70	100/140/180
RNS 180	880	3800	75	75	180	125	125	70	80	140/180
RNS 200	1337	3400	85	85	200	140	140	80	90	180/200/250
RNS 225	2006	3000	90	90	225	150	150	90	100	180/200/250
RNS 250	2770	2750	100	100	250	165	165	100	110	200/250